JUL/AUG 1988 ISSUE # 19

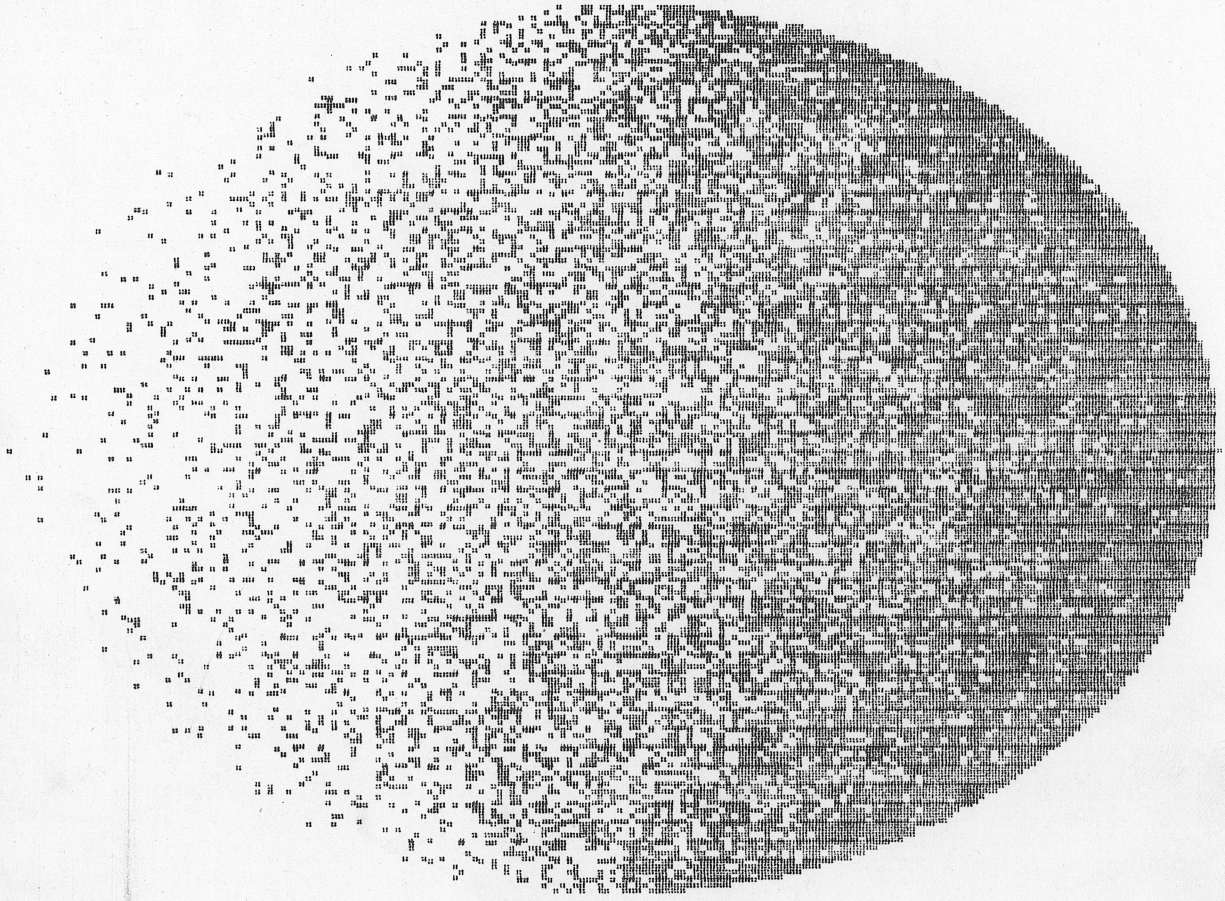

VZ 200/300

HUNTER VALLEY

VZ JOURNAL

PRODUCED BI-MONTHLY BY H.V.VZ.U.G

EDITOR'S COMMENTS 2

FRONT COVER :-

Another first for the Journal. This issue sports a cover having SUPER HI RESOLUTION. My thanks to Matthew Sorell for printer routine and Larry Taylor for SUPER HI-RES graphic screen with a resolution of 256 X 192 pixels.

CLUB NEWS AND OTHER USER GROUPS :- Page 3

PUT/GET * 3 by Robert QUINN Page 4
Robert has enlarged his previous PUT/GET routine with 3 instant menus.

FOR PRIVATE SALE - COMPUTER SHARER SWITCH Page 4

VZ MONOPOLY REVIEW by Peter J.HILL Page 5
If you like playing monopoly then get in quick for your VZ copy as it wont be available much longer. See VZ DOWN UNDER Ad on page 12.

FOR PRIVATE SALE - VZ200 TAPE SYSTEM :- Page 5

TAPE SIGNAL CONDITIONER by Neville HUGHES :- Page 6
With this unit you should be able to use about any cassette recorder with the VZ. Meter and sound indication is also provided.

PRINTER BUFFER UPDATE by Dave BOYCE :- Page 7
Dave gives an update of improved P.C.B's for printer buffer, etc.

64K RAM PACK CIRCUIT DIAGRAM by Chris HOBROUGH :- Page 8
Chris has provided 64K Ram Pack owners with invaluable info in case repairs are necessary. It's meant to supplement your Tech. Ref. Manual.

DISK DRIVE PROBLEMS :- Page 9
One of our members child used the drive as a money box. The child had trouble retrieving his coin while his dad could'nt get drive to work.

DOS PROBLEMS :- Page 9
Iv'e long been aware that different versions of DOS were around incuding two versions of V1.2 and not all versions are compatible with each other either.

JAG JETTY II by Adam MAGEE :- Pages 10-11
This sequel by Adam is bit more dificult to play and even thogh it's LO-RES a lot could be learned on how to move objects around the screen. Although the screen dumps does'nt show it the screen has black background.

FOR PRIVATE SALE :- Page 11
Dave Mitchell, author of original E & F Tape W.P. Patch has more goodies with an expanded EXTENDED DOS, MENU/FILE COPIER and DISKFILER/CATALOGUER.

VZ DOWN UNDER - NEWSLETTER AND SOFTWARE ADS :- Page 12
VZ DOWN UNDER SOFTWARE is closing down with software at bargain prices.

QUICKWRITE WORDPROCESSOR & E&F TAPE TO DISK W.P.PATCH :- Page 13

Z80 INSTRUCTION SET compiled by Brian GREEVE :- Pages 1-9
This list is tabulated in numerical order instead of OP CODE alphabetical order. The left column merely indicates LINE/LIST No.

128K S/WAYS RAM & 4K-64K S/WAYS EPROM - My apologies regarding above, but Circumstances have delayed them and they should be in next issue.

PROJECTS PLANNED FOR COMING ISSUES :-

AUTO START/STOP FOR DATASSETTES - SUPER HI-RES GRAPHICS ADAPTOR
8K-32K SIDEWAYS VIDEO RAM - 16K-32K SIDEWAYS EPROM (BASIC ROM).
DOS AREA 8K-64K SIDEWAYS EPROM - 32K-128K SIDEWAYS RAM (RAM DISK ??)

NEW COMMITTEE :-

At our June meeting a new committee was elected. All positions are honorary and carry no renumeration.

PRESIDENT	Ross WOODS	(049) 71 2843
SECRETARY/EDITOR . . .	Joe LEON	(049) 51 2756
TREASURER	Matthew TAYLOR	(049) 75 2350
COMMITTEE MEMBER . . .	Colin BRIDGE	

The Hunter Valley VZ Users' Group extends the outgoing President a vote of thanks for a job well done. Many people thought about starting a VZ club, but unlike others, myself included, Peter got of his butt and started the ball rolling, THANKS Peter.

AUGUST CLUB MEETING :-

Joe LEON will demonstrate his VZ which was modified for SUPER HI RESOLUTION GRAPHICS. Well worth seeing what the VZ is capable off.

BRISBANE VZ USERS WORKSHOP & EXPO 88 :-

Like many other people I'm off to Brisbane for EXPO 88 arriving 10 A.M., 7.8.88. After settling in at my destination then it's off to Brisbane Users Workshop club meeting around 1 P.M.

The above group put their monthly meeting back one day so I could attend and meet more of their members which I'm keenly looking forward to. I appreciate the compliment and my apologies to those members who may miss out on their regular meeting because it's a day later.

OTHER VZ USER GROUPS AND PUBLICATIONS :-

VZ USER MARK HARWOOD P.O.BOX 154 DURAL N.S.W. 2158

LE'VZ OOP J.C.E. D'ALTON 39 AGNES St. TOOWONG QLND. 4066
VSOFTWAREZ - SOFTWARE/HARDWARE FOR SALE

VZ DOWN UNDER SCOTT LE BRUN 59 BRENTWOOD DVE WANTIRNA 3152

VZ-LINK - PETER J. HILL P.O.BOX 1972 C.P.O. AUCKLAND N.Z.

WAVZ - GRAEME BYWATER P.O. BOX 388, MORLEY W.A. 6062

BRISBANE VZ USERS WORKSHOP - C/O 63 TINGALPA ST. WYNUM WEST 4178

HUNTER VALLEY VZ USERS' GROUP - P.O. BOX 161 JESMOND N.S.W. 2299
SECRETARY/EDITOR-JOE LEON (049) 51 2756 - PRESIDENT-ROSS WOODS (049) 71 2843

SUBSCRIPTION - H.V.VZ.JOURNAL - 6 MONTHS $9.00 - 12 MONTHS $18.00
New Zealand - 6 MONTHS $12.00 - 12 MONTHS $24.00

NEW VENUE - NEW DATES - NEW VENUE - NEW DATES - NEW VENUE

MEETINGS - FIRST FRIDAY of MONTH at JESMOND NEIGHBOURHOOD CENTRE
MORDUE PARADE - REAR STOCKLAND MALL (BIG W) JESMOND

NOTE :- When writing to any above or H.V.VZ. Users' Group for information please enclose a S.S.A.E. or NZ 2 Int. Reply Coupons.

The Hunter Valley VZ Journal is subject to COPYRIGHT and No MATERIAL in this Journal may be reproduced in part or whole without the consent of the Author who retains COPYRIGHT.

When RUN, PUTGET*3 sets up two machine code routines (PUT and GET) in a block of unused memory in the COMMUNICATIONS REGION and activates two of the old TRS80 DISK tokens which are POKEd into the BASIC subroutine (PUT/GET) located at the beginning of PUTGET*3 .

In text mode your VZ only uses the first quarter (512 bytes) of video memory to display the screen. The remaining three quarters of video memory can be used as three video stores:- VS0 (29184 to 29695), VS1 (29696 to 30207) and VS2 (30208 to 30719).

PUTGET*3 allows you to store three screens in video memory and recall them whenever you wish. The BASIC PUT/GET subroutine can be called with a GOSUB12, and offers you six options, selected by pressing the number keys 1 to 6:-

<1> GET: copies VS0 to screen
<2> GET1: copies VS1 to screen
<3> GET2: copies VS2 to screen
<4> PUT: copies screen to VS0
<5> PUT1: copies screen to VS1
<6> PUT2: copies screen to VS2

If you don't want the PUT/GET MENU to display (and so be copied to the video stores along with the rest of the screen) then use a GOSUB14 instead of a GOSUB12. The number keys will still do their jobs; you just have to remember which keys do what. Pressing any character key other than the number keys 1 to 6 will QUIT PUT/GET.

```
2 '*************************************************************
4 '*      PUTGET*3  SUBROUTINE  WRITTEN  BY  ROBERT  QUINN     *
6 '*************************************************************
8 :
10 GOTO022
12 PRINT"****[illegible]","[illegible]****"
14 K$=INKEY$:K$=INKEY$:IFK$=""THEN14ELSESOUND20,1
16 IFK$="1"THENGELSEIFK$="2"THENG1ELSEIFK$="3"THENG2
18 IFK$="4"THENPELSEIFK$="5"THENP1ELSEIFK$="6"THENP2
20 IFK$>"0"ANDK$<"7"THEN14ELSERETURN
22 POKE31556,164:POKE31567,164:POKE31579,164
24 POKE31594,165:POKE31605,165:POKE31617,165
30 FORR=31273TO31345:READB:A=A+B:POKER,B:NEXT
35 IFA<>6240THENSOUND30,2;20,1:PRINT"[illegible]":END
40 POKE31107,41:POKE31108,122:POKE31104,72:POKE31105,122
45 DATA17,0,114,183,40,19,254,58,40,15,35,254,49,17,0,116,40,7
50 DATA254,50,17,0,118,32,44,229,33,0,112,24,31
55 DATA229,33,0,114,17,0,112,183,40,21,254,58,40,17,225,35,229
60 DATA254,49,33,0,116,40,7,254,50,33,0,118,32,7,1,0,2,237,176
65 DATA225,201,225,195,151,25
```


FOR PRIVATE SALE

COMPUTER SHARER SWITCH :-
Complete ready to plug in, includes paperwork. Requires power supply or plug pack.

PRICE $50.00 & includes P/P within Aust. and is available from :-
Dave BOYCE 41 HEATHER Drive CHRISTIE DOWNS 5164 S.A.
For more info send SSAE or phone (08) 384 6574

If you have ever played the board game Monopoly, you will know that it is a excellent game which has been around for many years, and is played by many people in many countries.

Now you can play Monopoly on the VZ computer with all the frill's and deals of the board game.

For those that have never played Monopoly, its all about buying and selling real estate including railway stations, waterworks and even whole streets.

Once you start to acquire property it will really go to your head and the feel of the mighty dollar will get the better of you. You will soon get the art of wheeling and dealing.

This program is well designed and really well written and I am sure that this VZ version will give you as much pleasure and mental stimulation as the board bound monopoly.

You are able to view your title deeds and you can even look at a Hi-Res picture of the monopoly board, which shows where each player is. Also available is a graphic picture of your present location on the board. You also have all the features of the board game such as community chest and chance.

Upto nine players can play this game, I would like to get nine people together and just see how well this great program handles all the input details. I however enjoyed playing the VZ and did Infact win one game.

CONCLUSION :-

Another superb piece of VZ software and as stated a very excellent, and well written VZ game to play.

COST A$15-00 - Available from :-
Scott Le Brun 59 Brentwood Drive
Wantirna VIC 3152 Australia

STOP PRESS - VZ DOWN UNDER SOFTWARE is closing down and VZ MONOPOLY is available at a clearance price of only $5.00 for TAPE OR DISK version. Other titles available at same price. See VZ Down Under ad elsewhere in this issue for other titles.

FOR PRIVATE SALE

HARDWARE - VZ200 + DR20 DATASSETTE

VZ200 16K RAM PACK, JOYSTICK & PRINTER INTERFACES

SOFTWARE - Over 20 tapes

BOOKS - Giant book of games, Introduction to Computing and VZ300 Technical Reference Manual.

PROGRAM LISTINGS - Bundle from various sources.

For prices and more information contact Warren KEEN on (049) 46 7323

THIS CIRCUIT MAY BE OF INTEREST TO TAPE USERS, A FAIR AMOUNT OF LABOUR IS INVOLVED, BUT IT WILL LOAD FROM ANY CASSETTE RECORDER EVEN WITH TONE CONTROLS TWIDDLED.

I CAN'T GIVE PARTS VALUES BECAUSE IT DEPENDS ON YOUR COMPUTER A CERTAIN AMOUNT AND VERY MUCH ON THE TYPE OF METER USED. FOR THAT REASON VARIABLE RESISTORS (POTS) ARE SHOWN IN CIRCUIT AND WHEN UNIT IS CALIBRATED THE POTS CAN BE MEASURED AND REPLACED WITH NEAREST VALUE 1/4W RESITORS.

SETTING UP METER CIRCUIT :-

SET POT TO FULL VALUE, GET A TAPE THAT YOU KNOW LOADS WELL. PLUG METER INTO COMPUTER. START TAPE AND ADJUST POT SO METER IS SHOWING HALF SCALE. ALLOW TAPE TO FINISH LOADING AND RUN PROGRAM TO CHECK THAT IT LOADED OK.

NEXT GET A LOUSY TAPE (PROGRAM THAT WON'T LOAD PROPERLY) AND ADJUST VOLUME CONTROL ON CASSETTE RECORDER TILL METER SHOWS 1/2 SCALE. REWIND TAPE AND CRUN, IT SHOULD LOAD OK.

SIGNAL CONDITIONER :-

DO NOT CONNECT METER TILL THIS UNIT IS CALIBRATED. SET 10K POT HALFWAY, PUT IN A GOOD TAPE AND PRESS PLAY. ADJUST CASSETTE RECORDER VOLUME ABOUT 1/4 WAY AND THEN ADJUST 500R INPUT POT UNTIL YOU HEAR SOUND IN SPEAKER (THIS IS THE TRICKY BIT).

TURN 10K POT SO SOUND IS EASY TO HEAR. IF SOUND IS A NICE CLEAN NOTE, TURN 500R INPUT POT TO HIGHER VALUE (ON THE INPUT POT IT'S BEST NOT TO DROP BELOW AROUND 80 OHMS) AND IF SOUND DOES NOT CHANGE LOWER THE VOLUME ON CASSETTE RECORDER AND YOU WILL FIND A POINT WHERE THE SOUND GOES FUZZY. TURN VOLUME CONTROL UP JUST ABOVE WHERE IT SOUNDS CLEAN AND SWITCH CASSETTE RECORDER OF.

ADJUST 500R OUTPUT POT TO IT'S FULL VALUE OF 500 OHMS. PLUG METER INTO COMPUTER AND CONNECT OUTPUT POT OF SIGNAL CONDITIONER TO INPUT OF METER. SWITCH CASSETTE RECORDER ON AND PUT IN A GOOD TAPE AND PRESS PLAY. ADJUST 500R OUTPUT POT FOR SAME SCALE READING AS BEFORE.

TRY LOADING ONE OR MORE TAPES AND IF ALL LOAD OK THEN THE TWO 500 OHM POTS CAN BE MEASURED AND REPLACED WITH NEAREST VALUE 1/4W RESISTORS. SWITCH TAPE BACK ON AND NOTE ANY CHANGE IN METER READING, AND WHEREVER IT NOW READS IS YOUR SETTING POINT FOR LODING TAPES.

I PLAYED WITH TREBLE AND BASS CONTROLS WHILE LOADING SOME REAL LOUSY TAPES AND THEY LOADED EVERY TIME. THE ABOVE CIRCUIT SHOULD WORK WITH MOST RECORDERS AND IF SET UP WITH SAME, ANY COMPUTER AND NOT ONLY THE VZ.

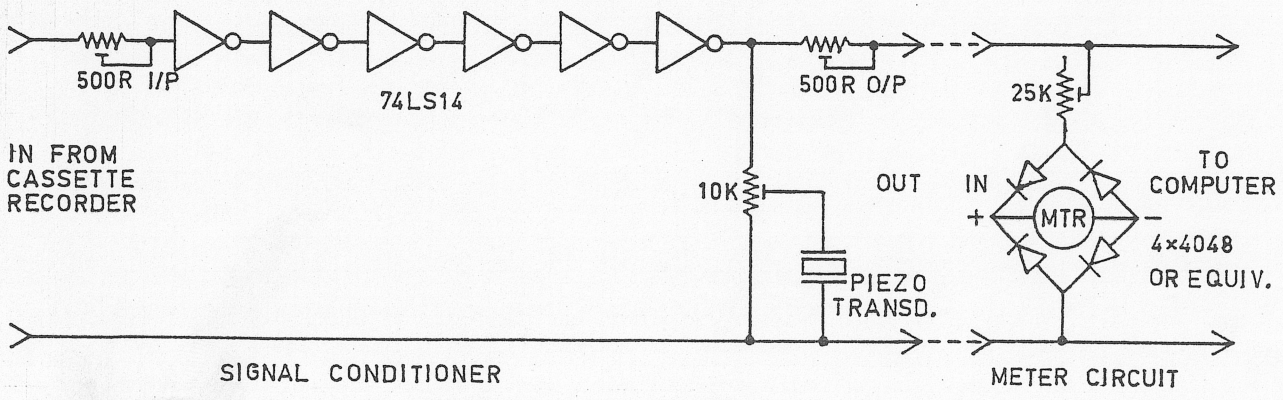

UPDATE ON DON McKENZIES PRINTER BUFFER

This article is not intended as a rewrite of one I wrote which appeared in the AUGUST 1986 issue of HUNTER VALLEY VZ USERS' GROUP NEWSLETTER or the A.E.M. article in MARCH 1987 page 92 which explains the workings in better detail. If you don't have this issue look it up in your local library, it's well worth the effort. This article is simply an update on the P.C. Board and the EPROM itself, plus some of Don's other P.C. Boards.

First we'll look at the board. The older boards were Single Sided and required some 31 links, whereas the latest version (G) is now DOUBLE SIDED with PLATED THROUGH HOLES - No more links. This makes for a much smaller and compact board. The next improvement is provision for using I.D.C. connectors & headers.

The EPROM - Earlier Eproms contained as one of their features a Software Pause. This S/P was simply a Double Back Slash '\\' which was used to stop the P/BUFFER from Outputting Data until the COPY switch was pressed, then it would carry on as before. This feature has it's uses. Don now has two versions of the EPROM :-

Version PD includes the Software Pause facility.
Version PC is without the Software Pause facility.

When ordering from Don, please state which version you require. In the Sept. 1987 issue of Hunter Valley VZ Users' Group Journal I wrote on Don's :- PRINTER SWITCH, COMPUTER SWITCH and mentioned the SERIAL BOARD.

At that time, I had only made the P/BUFFER and PRINTER SWITCH. Since then I've also built up a SERIAL BOARD, COMPUTER SWITCH, another PRINTER SWITCH and of the new Double Sided Boards a BPIO (Back Panel IN/OUT) Board and a version (G) P/BUFFER using a version PC EPROM. Along with the P/BUFFER board all the other boards are ' Tinned Double Sided with Plated Through Holes ' which makes for an exellent finish. The Serial Board (RS-232 or TTL levels) is actually in two sections :-

1> Serial to Parallel converter
2> Parallel to Serial converter

By using both sections, a Serial Only System (Serial Out Computer to Serial in Printer) can make good use of the P/BUFFER. Don also has a range of (5) small boards, IE :-

DB CROSS-25	(Gender Bender)	DB-JUMP -25
DB-BEND -25	(T-GENDER Bender)	DB-PATCH-25
DB-TEST -25		

Please remember - exept for the P/BUFFER Board which comes with an EPROM, ALL units are P.C. Boards ONLY to which you must add your own components.

Current Prices - These may change so please check.

PBUFFER Short Form Kit	$40.00	DB-CROSS-25	$14.00
SERIAL BOARD - - - - - -	$18.00	DB-JUMP -25	$ 4.00
PRINTER SWITCH BOARD - -	$12.00	DB-BEND -25	$ 4.00
COMPUTER SWITCH BOARD -	$12.00	Db-PATCH-25	$ 4.00
BACK PANEL IN/OUT BOARD	$ 9.00	DB-TEST -25	$ 4.00

Plus Pack & Post

For more information and paperwork enclosing a SSAE write to :-
Mr. Don McKENZIE 29 ELLESMERE Cresc. TULLAMARINE 3043 Vict. Aust.

Written by Dave BOYCE April 1988

64K RAM PACK CIRCUIT DIAGRAM

DRAWN BY CHRIS HOBROUGH

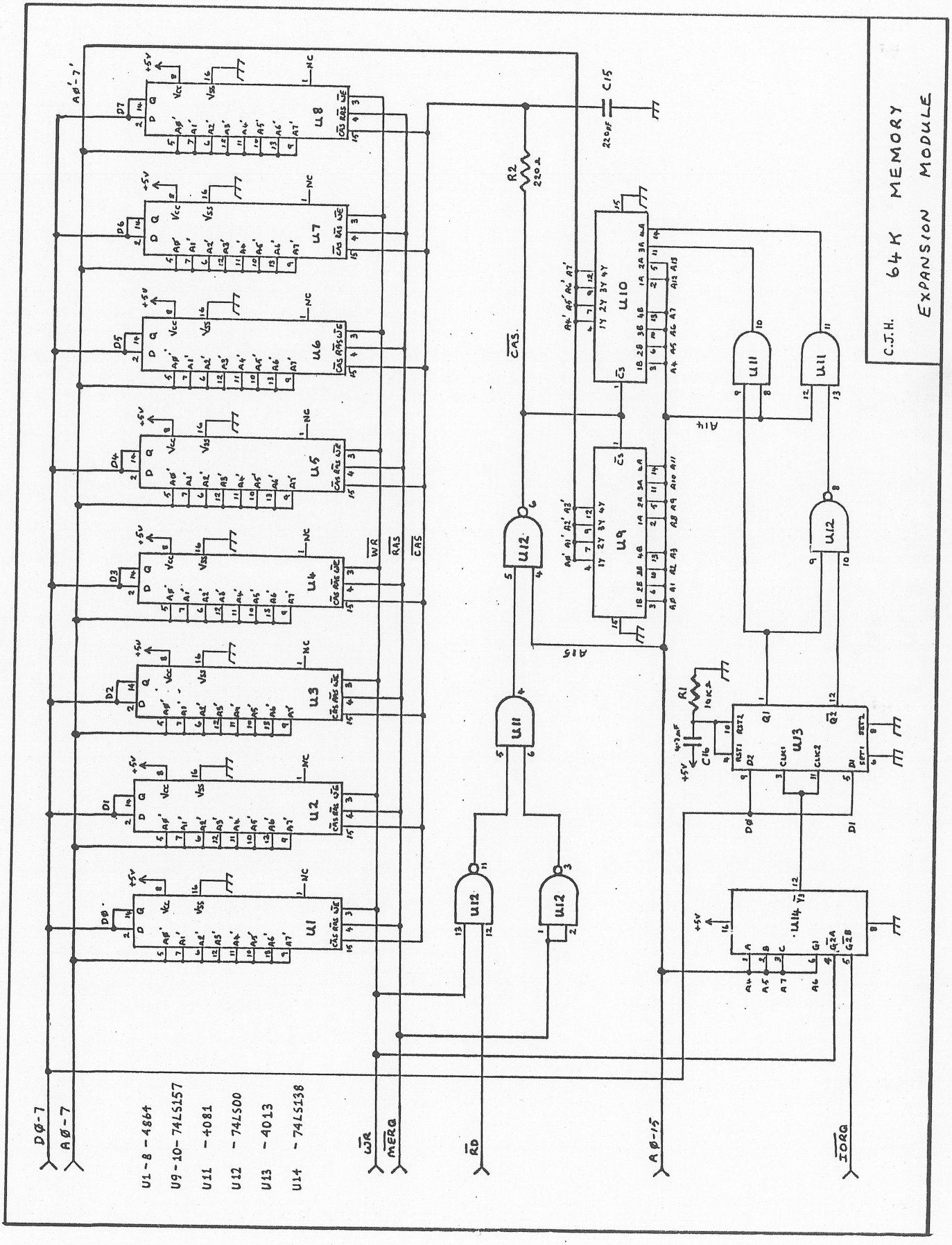

DISK DRIVE PROBLEMS . . . . . .

One of our club members had an unusual problem with his drive. It didn't matter what disk command was used the drive motor would go on and on and not turn off till power was turned off. Also no disk function was performed. The only function that worked correctly was the error message to inform you DISK WRITE PROTECTED.

Investigation by club member revealed a 5 cent coin inside drive. It seems his child used his drive as a money box, a very expensive one too. I offered to have a look at drive as I had some ideas on possible problem.

The VZ disk drive system consists of Drive and Controller and obviously both had to be tested. First, his disk controller was tried with my drive and it worked OK. Next my controller was tried with his drive and it still had faults as before which ruled out his controller.

Fixing anything is a process of elimination and deduction and sometimes a lot of luck. By studying circuit diagram of drive in Tech. Ref. Manual I suspected U8, ULN2003 which is an octal relay/motor driver IC. The other contender was a 74LS14, a HEX SCHMITT TRIGGER IC. While the circuit board was out I decided to remove four IC'S and put in sockets in case others had to be replaced.

Surprise !, a 74LS32 was discovered on P.C.B. which wasn't shown in circuit and I had no idea of function it performed. The 74LS14 was replaced first and it made no difference. Next the 74LS32 and ULN2003 were replaced and drive worked OK. As it was getting late, drive was reasembled and I haven't had chance to find out which IC was the culprit. I strongly suspect the ULN2003.

It appears that early versions of disk drives have no 74LS32'S while later ones have and both my drives do.

DOS PROBLEMS . . . . . .

As editor I receive and send disks all over Aust. and N.Z. Mostly the disks work OK, but a few do not. I used to blame drive incompatibility, but couple days ago I came across second version 1.2 DOS which previously I only heard about. As far as I know there are five versions of DOS around and I suspect not all 100% compatible with each other. The five versions are -

V1.0 - V1.1 - V1.2A - V1.2B - Laserlink Dos.

I have version 1.0 and 1.2B. I call the two versions of V1.2, A and B simply to tell them apart as they both power up as V1.2. One of the programs sent to me used to hang up the VZ when specific disk access was performed. I placed V1.2A in my 8K BIB Ram and switched out V1.2B and switched in V1.2A, and now the particular program performs as designed.

When time permits I'll investigate as far as I can the incompatibility between the two versions, or if someone already has, then we would be pleased if you would share with other VZ users. I've never came across a V1.1 DOS and if someone has one, then I would like to hear from you.

```
10 REM JAG JETTY II - JOYSTICK VERSION
20 LK=0:CLS:POKE30744,1
30 FORI%=28671TO29184:POKEI%,128:NEXT
40 FORI%=28672TO29184STEP32:POKEI%+10,191:POKEI%+23,191:NEXT
50 FORI%=29152+11TO29152+22:POKEI%,239:NEXT
51 PRINT:PRINT:PRINT:PRINT:PRINT:PRINT
52 PRINT"   ▌  "
53 PRINT"   ▌  "
54 PRINT"   ▌  "
55 PRINT"▗▘▌▝▖"
56 PRINT"  ▜▙▛ "
57 PRINT"   ▝  "
60 PRINT@384+11,"▟▟▟▟▟▟ "
70 X=16:Y=0
80 A=(INP(43)AND31)
90 IFA=30ANDY>0THENY=Y-1:IFY=0ANDLK=1THEN7000
100 IFA=29ANDY<15THENY=Y+1
110 IFA=27THENX=X-1
120 IFA=23THENX=X+1
125 P=PEEK(28672+X+Y*32)
126 IFP=239THEN4000
127 IFP=159ORP=191ORP=223ORP=31THEN5000
130 POKE28672+OX+OY*32,128
140 POKE28672+X+Y*32,42
141 P=PEEK(28672+X+Y*32)
142 IFP=239THEN4000
143 IFP=159ORP=191ORP=223ORP=31THEN5000
150 OX=X:OY=Y
160 I=RND(12)
170 IFI=1ORI=8ORI=4THENGOSUB1000
180 IFI=2ORI=5THENGOSUB2000
190 IFI=3ORI=6ORI=12THENGOSUB3000
200 IFI=8ORI=7THENGOSUB1500
220 IFI=10ORI=9ORI=11THENGOSUB3500
230 GOTO 80
1000 PRINT@384+11,"▜▜▜▜▜▜ ":RETURN
1500 PRINT@384+11," ▜▜▜▜▜▜":RETURN
2000 FORI%=22TO11STEP-1
2005 IFPEEK(28672+128+I%)=42THEN5000
2010 POKE28672+128+I%,31
2030 IFI%<22THENPOKE28672+128+I%+1,128
2040 NEXT
2041 POKE28672+128+11,128
2050 RETURN
3000 FORI%=11TO17
3010 POKE28672+256+I%,223:POKE28672+256+33-I%,223
3020 FORMN=1TO20:NEXT:NEXT
3030 RETURN
3500 FORI%=11TO17
3510 POKE28672+256+I%,128:POKE28672+256+33-I%,128
3515 FORNM=1TO20:NEXT:NEXT
3520 RETURN
4000 LK=1:Y=Y-1
4010 PRINT@192,"   ▗   "
4020 PRINT@224," ▗▟▙▖  "
4030 PRINT@256,"▗▘▌▝▖ "
4040 PRINT@288,"   ▌   "
4050 PRINT@320,"   ▌   "
4060 PRINT@352,"   ▌   "
4070 GOTO80
5000 CLS:PRINT"BOOM":END
7000 PRINT"YIPPEE"
```

JAG JETTY II was written for joystick use. To use it with the keyboard type in lines 80 to 120 below. The object of the game is to move the Star past 3 moving obstacles to the bottom then return without getting zapped or squashed. Have fun . . .

```
80 A$=INKEY$:A$=INKEY$
90 IFA$="Q"ANDY>0THENY=Y-1:IFY=0ANDLK=1THEN7000
100 IFA$="A"ANDY<15THENY=Y+1
110 IFA$="M"THENX=X-1
120 IFA$=","THENX=X+1
```

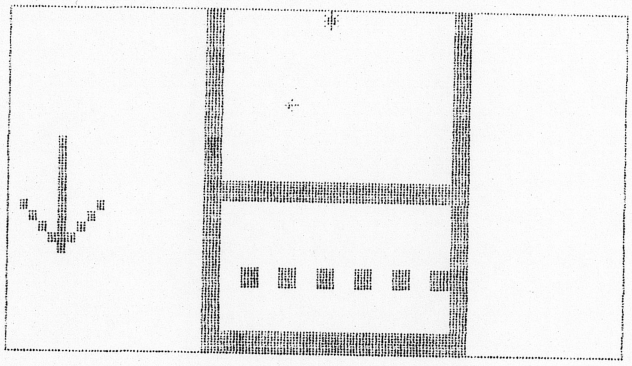

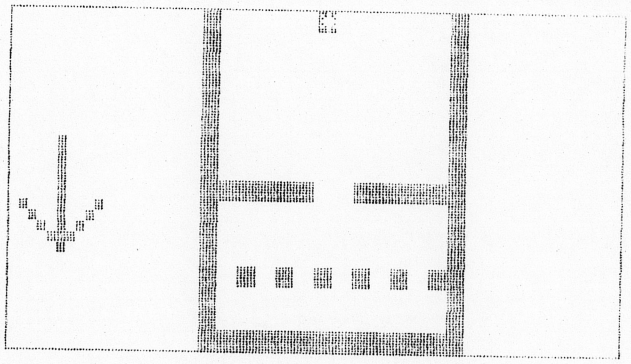

FOR PRIVATE SALE . . . . . .

EXTENDED DOS V1.3 - $15.00
The previous version has been updated with extra commands added.

OLD COMMANDS :-
MERGE, DIRA, LDIRA, DIRB, LDIRB, OLD, OLD., DEC, HEX, STATUSA and LSTATUSA.
STATUSA and LSTATUSA also works with Version 1.0 DOS.

NEW COMMANDS :-
MENU - Loads and RUNs Binary or Text MENU program from disk.
CODE - Simplifies using printer control codes directly or from within a program.
LTAB - Is for setting of Left Margin.
MOVE - Moves Basic file from disk to chosen memory address.
UPD - Erases old file and saves with same file name.

MENU/FILE COPIER/DISK ORGANISER - $15.00
This utility will read your disk directory and present you with several options. Using the Cursor you can RUN/BRUN any program or select FILE COPY, REN, ERASE, DRIVE 1 OR 2, etc. Besides COPYING TEXT and BINARY files all other files can be copied as well exept for DATA files.

DISKFILER - To be released soon
This utility will allow you to keep track of what files are on which disk with Printout and many other options. It's a Database for your disk files.

For purchase or more info contact - Dave MITCHELL - (079) 27 8519
24 ELPHINSTONE St. NORTH ROCKHAMPTON QUEENSLAND 4701

For information or demonstration in Newcastle area contact :-
Joe LEON - (049) 51 2756 - 22 DRURY St. WALLSEND NSW 2287

VZ DOWN UNDER

VZ200/300 USERS' MAGAZINE

The magazine is published on a bi-monthly basis. Each edition consists of 10-20 pages choc-a-block full of hints & tips, articles and program listings. Featuring *"BASIC MADE EASY"* for the complete beginner and *"ASSEMBLY LANGUAGE PROGRAMMING"* for the machine code programmer, as regular articles.

Also a *HIGH SCORE* list aswell as an *ADVENTURERS' COLUMN* for the game players.

HARDWARE & SOFTWARE REVIEWS are included in every edition to let you, the user, know what each item is like *Before* you buy it.

And all this for an annual subscription of only $18.

Write for a free copy of the latest edition.

VZ DOWN UNDER

59 Brentwood Dve Wantirna Vic 3152

VZ DOWN UNDER SOFTWARE CO.

Closing Down Sale

ALL STOCKS MUST BE CLEARED

ADVENTURES!

KNIGHTS QUEST
CASTLE GREYSTONE
HAUNTED MANSION
SCOTLAND YARD

UTILITIES!

DATA
NAMESTAR/
SHOPSTAR
GRAFSTAR

EDUCATIONAL!

FBI-2001
TRIVIAL CULT

GAMES!

BLACKJACK ROYALE
GALACTIC EMPIRES
VZ MONOPOLY

All Software only $5.00

TAPE/DISK

CHEQUES/M.O. : - SCOTT LE BRUN

VZ DOWN UNDER
59 BRENTWOOD DVE WANTIRNA 3152

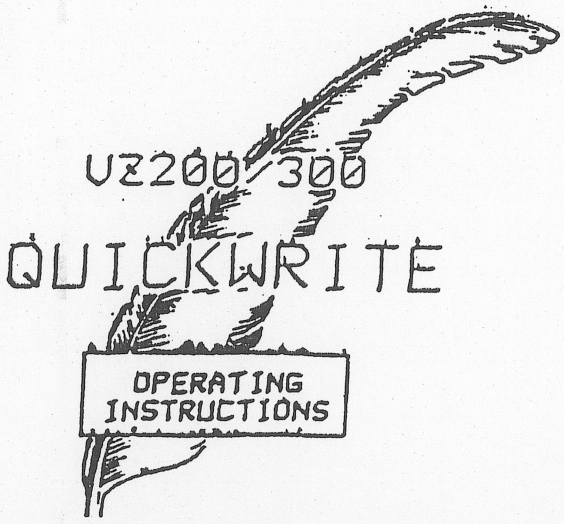

*** QUICKWRITE WORDPROCESSOR ***

NEW VERSION V4.

Version V4 does not replace Version V3. V4 is a little more complicated to use but has more facilities.

The main one being that printer print styles, often wrongly called fonts, can be changed anywhere in the data/text. This means even part of a word.

Another feature is the ability to scroll up and down, to start or end of the text. This is rather small to read but it demonstrates what can be done.

This is printed by a CITIZEN 120 D printer which can print in the mode called inversed.

Price A$40.00.

Only available from VSOFTWAREZ
39 Agnes St., TOOWONG. QLD. 4066.
AUSTRALIA.
Phone (07) 371 3707.

E & F PATCH 3.1 (C) H.V.VZ.U.G.

This single Patch will convert your E & F TAPE WORD PROCESSOR for full DISK use while retaining all TAPE functions. It can be used with 1 or 2 DRIVES. Below are the two Menus.

E)DIT TEXT	L)OAD
C)LEAR TEXT	S)AVE
P)RINT TEXT	D)IR
L)OAD FILE	E)RA
S)AVE FILE	R)EN
V)ERIFY FILE	I)NIT
Q)UIT PROGRAM	1-2) DRIVE 1
D)ISK	M)ENU

Fast SAVING and LOADING of TEXT DATA to and from Disk is provided using Block SAVE/LOAD techniques. Full instructions are supplied together with a Tape to Disk transfer utility for your E & F Tape Word Processor.

This Patch will work with V1.0 or V1.2 Disk Controller. A STATUS facility has been added for V1.0 DOS owners.

SYSTEM REQUIREMENTS :- DISK DRIVE + V1.0 OR V1.2 DOS
VZ300 + 16K RAM PACK OR
VZ200 + 18K (16K RAM PACK + 2K)

The price - $13.00, NZ AU$15.00 and is available from :-
HUNTER VALLEY VZ USERS' GROUP P.O.BOX 161 JESMOND 2299
N.S.W. AUSTRALIA Phone (049)51 2756

Z80 OPCODES COMPILED BY B.GREEVE

0		00	NOP
1	1,#,#	013412	LD BC'1234
2	2	02	LD (BC)'A
3	3	03	INC BC
4	4	04	INC B
5	5	05	DEC B
6	6,#	0612	LD B'12
7	7	07	RLCA
8	8	08	EX AF'AF'
9	9	09	ADD HL'BC
10	10	0A	LD A'(BC)
11	11	0B	DEC BC
12	12	0C	INC C
13	13	0D	DEC C
14	14,#	0E12	LD C'12
15	15	0F	RRCA
16	16,#	10FE	DJNZ $
17	17,#,#	113412	LD DE'1234
18	18	12	LD (DE)'A
19	19	13	INC DE
20	20	14	INC D
21	21	15	DEC D
22	22,#	1612	LD D'12
23	23	17	RLA
24	24,#	18FE	JR $
25	25	19	ADD HL'DE
26	26	1A	LD A'(DE)
27	27	1B	DEC DE
28	28	1C	INC E
29	29	1D	DEC E
30	30,#	1E12	LD E'12
31	31	1F	RRA
32	32,#	20FE	JR NZ'$
33	33,#,#	213412	LD HL'1234
34	34,#,#	223412	LD (1234)'HL
35	35	23	INC HL
36	36	24	INC H
37	37	25	DEC H
38	38,#	2612	LD H'12
39	39	27	DAA
40	40,#	28FE	JR Z'$
41	41	29	ADD HL'HL
42	42,#,#	2A3412	LD HL'(1234)
43	43	2B	DEC HL
44	44	2C	INC L
45	45	2D	DEC L
46	46,#	2E12	LD L'12
47	47	2F	CPL
48	48,#	30FE	JR NC'$
49	49,#,#	313412	LD SP'1234
50	50,#,#	323412	LD (1234)'A
51	51	33	INC SP
52	52	34	INC (HL)
53	53	35	DEC (HL)
54	54,#	3612	LD (HL)'12
55	55	37	SCF
56	56,#	38FE	JR C'$
57	57	39	ADD HL'SP
58	58,#,#	3A3412	LD A'(1234)
59	59	3B	DEC SP
60	60	3C	INC A
61	61	3D	DEC A
62	62,#	3E12	LD A'12
63	63	3F	CCF
64	64	40	LD B'B
65	65	41	LD B'C
66	66	42	LD B'D
67	67	43	LD B'E
68	68	44	LD B'H
69	69	45	LD B'L
70	70	46	LD B'(HL)
71	71	47	LD B'A

72	72	48	LD C'B
73	73	49	LD C'C
74	74	4A	LD C'D
75	75	4B	LD C'E
76	76	4C	LD C'H
77	77	4D	LD C'L
78	78	4E	LD C'(HL)
79	79	4F	LD C'A
80	80	50	LD D'B
81	81	51	LD D'C
82	82	52	LD D'D
83	83	53	LD D'E
84	84	54	LD D'H
85	85	55	LD D'L
86	86	56	LD D'(HL)
87	87	57	LD D'A
88	88	58	LD E'B
89	89	59	LD E'C
90	90	5A	LD E'D
91	91	5B	LD E'E
92	92	5C	LD E'H
93	93	5D	LD E'L
94	94	5E	LD E'(HL)
95	95	5F	LD E'A
96	96	60	LD H'B
97	97	61	LD H'C
98	98	62	LD H'D
99	99	63	LD H'E
100	100	64	LD H'H
101	101	65	LD H'L
102	102	66	LD H'(HL)
103	103	67	LD H'A
104	104	68	LD L'B
105	105	69	LD L'C
106	106	6A	LD L'D
107	107	6B	LD L'E
108	108	6C	LD L'H
109	109	6D	LD L'L
110	110	6E	LD L'(HL)
111	111	6F	LD L'A
112	112	70	LD (HL)'B
113	113	71	LD (HL)'C
114	114	72	LD (HL)'D
115	115	73	LD (HL)'E
116	116	74	LD (HL)'H
117	117	75	LD (HL)'L
118	118	76	HALT
119	119	77	LD (HL)'A
120	120	78	LD A'B
121	121	79	LD A'C
122	122	7A	LD A'D
123	123	7B	LD A'E
124	124	7C	LD A'H
125	125	7D	LD A'L
126	126	7E	LD A'(HL)
127	127	7F	LD A'A
128	128	80	ADD A'B
129	129	81	ADD A'C
130	130	82	ADD A'D
131	131	83	ADD A'E
132	132	84	ADD A'H
133	133	85	ADD A'L
134	134	86	ADD A'(HL)
135	135	87	ADD A'A
136	136	88	ADC A'B
137	137	89	ADC A'C
138	138	8A	ADC A'D
139	139	8B	ADC A'E
140	140	8C	ADC A'H
141	141	8D	ADC A'L
142	142	8E	ADC A'(HL)
143	143	8F	ADC A'A
144	144	90	SUB B
145	145	91	SUB C
146	146	92	SUB D
147	147	93	SUB E
148	148	94	SUB H
149	149	95	SUB L

150	150	96	SUB (HL)
151	151	97	SUB A
152	152	98	SBC A'B
153	153	99	SBC A'C
154	154	9A	SBC A'D
155	155	9B	SBC A'E
156	156	9C	SBC A'H
157	157	9D	SBC A'L
158	158	9E	SBC A'(HL)
159	159	9F	SBC A'A
160	160	A0	AND B
161	161	A1	AND C
162	162	A2	AND D
163	163	A3	AND E
164	164	A4	AND H
165	165	A5	AND L
166	166	A6	AND (HL)
167	167	A7	AND A
168	168	A8	XOR B
169	169	A9	XOR C
170	170	AA	XOR D
171	171	AB	XOR E
172	172	AC	XOR H
173	173	AD	XOR L
174	174	AE	XOR (HL)
175	175	AF	XOR A
176	176	B0	OR B
177	177	B1	OR C
178	178	B2	OR D
179	179	B3	OR E
180	180	B4	OR H
181	181	B5	OR L
182	182	B6	OR (HL)
183	183	B7	OR A
184	184	B8	CP B
185	185	B9	CP C
186	186	BA	CP D
187	187	BB	CP E
188	188	BC	CP H
189	189	BD	CP L
190	190	BE	CP (HL)
191	191	BF	CP A
192	192	C0	RET NZ
193	193	C1	POP BC
194	194,#,#	C23412	JP NZ'1234
195	195,#,#	C33412	JP 1234
196	196,#,#	C43412	CALL NZ'1234
197	197	C5	PUSH BC
198	198,#	C612	ADD A'12
199	199	C7	RST 00H
200	200	C8	RET Z
201	201	C9	RET
202	202,#,#	CA3412	JP Z'1234
203	203,	CB00	RLC B
204	203, 1	CB01	RLC C
205	203, 2	CB02	RLC D
206	203, 3	CB03	RLC E
207	203, 4	CB04	RLC H
208	203, 5	CB05	RLC L
209	203, 6	CB06	RLC (HL)
210	203, 7	CB07	RLC A
211	203, 8	CB08	RRC B
212	203, 9	CB09	RRC C
213	203, 10	CB0A	RRC D
214	203, 11	CB0B	RRC E
215	203, 12	CB0C	RRC H
216	203, 13	CB0D	RRC L
217	203, 14	CB0E	RRC (HL)
218	203, 15	CB0F	RRC A
219	203, 16	CB10	RL B
220	203, 17	CB11	RL C
221	203, 18	CB12	RL D
222	203, 19	CB13	RL E
223	203, 20	CB14	RL H
224	203, 21	CB15	RL L
225	203, 22	CB16	RL (HL)
226	203, 23	CB17	RL A
227	203, 24	CB18	RR B

228	203, 25	CB19	RR C
229	203, 26	CB1A	RR D
230	203, 27	CB1B	RR E
231	203, 28	CB1C	RR H
232	203, 29	CB1D	RR L
233	203, 30	CB1E	RR (HL)
234	203, 31	CB1F	RR A
235	203, 32	CB20	SLA B
236	203, 33	CB21	SLA C
237	203, 34	CB22	SLA D
238	203, 35	CB23	SLA E
239	203, 36	CB24	SLA H
240	203, 37	CB25	SLA L
241	203, 38	CB26	SLA (HL)
242	203, 39	CB27	SLA A
243	203, 40	CB28	SRA B
244	203, 41	CB29	SRA C
245	203, 42	CB2A	SRA D
246	203, 43	CB2B	SRA E
247	203, 44	CB2C	SRA H
248	203, 45	CB2D	SRA L
249	203, 46	CB2E	SRA (HL)
250	203, 47	CB2F	SRA A
251	203, 56	CB38	SRL B
252	203, 57	CB39	SRL C
253	203, 58	CB3A	SRL D
254	203, 59	CB3B	SRL E
255	203, 60	CB3C	SRL H
256	203, 61	CB3D	SRL L
257	203, 62	CB3E	SRL (HL)
258	203, 63	CB3F	SRL A
259	203, 64	CB40	BIT 0'B
260	203, 65	CB41	BIT 0'C
261	203, 66	CB42	BIT 0'D
262	203, 67	CB43	BIT 0'E
263	203, 68	CB44	BIT 0'H
264	203, 69	CB45	BIT 0'L
265	203, 70	CB46	BIT 0'(HL)
266	203, 71	CB47	BIT 0'A
267	203, 72	CB48	BIT 1'B
268	203, 73	CB49	BIT 1'C
269	203, 74	CB4A	BIT 1'D
270	203, 75	CB4B	BIT 1'E
271	203, 76	CB4C	BIT 1'H
272	203, 77	CB4D	BIT 1'L
273	203, 78	CB4E	BIT 1'(HL)
274	203, 79	CB4F	BIT 1'A
275	203, 80	CB50	BIT 2'B
276	203, 81	CB51	BIT 2'C
277	203, 82	CB52	BIT 2'D
278	203, 83	CB53	BIT 2'E
279	203, 84	CB54	BIT 2'H
280	203, 85	CB55	BIT 2'L
281	203, 86	CB56	BIT 2'(HL)
282	203, 87	CB57	BIT 2'A
283	203, 88	CB58	BIT 3'B
284	203, 89	CB59	BIT 3'C
285	203, 90	CB5A	BIT 3'D
286	203, 91	CB5B	BIT 3'E
287	203, 92	CB5C	BIT 3'H
288	203, 93	CB5D	BIT 3'L
289	203, 94	CB5E	BIT 3'(HL)
290	203, 95	CB5F	BIT 3'A
291	203, 96	CB60	BIT 4'B
292	203, 97	CB61	BIT 4'C
293	203, 98	CB62	BIT 4'D
294	203, 99	CB63	BIT 4'E
295	203,100	CB64	BIT 4'H
296	203,101	CB65	BIT 4'L
297	203,102	CB66	BIT 4'(HL)
298	203,103	CB67	BIT 4'A
299	203,104	CB68	BIT 5'B
300	203,105	CB69	BIT 5'C
301	203,106	CB6A	BIT 5'D
302	203,107	CB6B	BIT 5'E
303	203,108	CB6C	BIT 5'H
304	203,109	CB6D	BIT 5'L
305	203,110	CB6E	BIT 5'(HL)

306	203,111	CB6F	BIT 5'A
307	203,112	CB70	BIT 6'B
308	203,113	CB71	BIT 6'C
309	203,114	CB72	BIT 6'D
310	203,115	CB73	BIT 6'E
311	203,116	CB74	BIT 6'H
312	203,117	CB75	BIT 6'L
313	203,118	CB76	BIT 6'(HL)
314	203,119	CB77	BIT 6'A
315	203,120	CB78	BIT 7'B
316	203,121	CB79	BIT 7'C
317	203,122	CB7A	BIT 7'D
318	203,123	CB7B	BIT 7'E
319	203,124	CB7C	BIT 7'H
320	203,125	CB7D	BIT 7'L
321	203,126	CB7E	BIT 7'(HL)
322	203,127	CB7F	BIT 7'A
323	203,128	CB80	RES 0'B
324	203,129	CB81	RES 0'C
325	203,130	CB82	RES 0'D
326	203,131	CB83	RES 0'E
327	203,132	CB84	RES 0'H
328	203,133	CB85	RES 0'L
329	203,134	CB86	RES 0'(HL)
330	203,135	CB87	RES 0'A
331	203,136	CB88	RES 1'B
332	203,137	CB89	RES 1'C
333	203,138	CB8A	RES 1'D
334	203,139	CB8B	RES 1'E
335	203,140	CB8C	RES 1'H
336	203,141	CB8D	RES 1'L
337	203,142	CB8E	RES 1'(HL)
338	203,143	CB8F	RES 1'A
339	203,144	CB90	RES 2'B
340	203,145	CB91	RES 2'C
341	203,146	CB92	RES 2'D
342	203,147	CB93	RES 2'E
343	203,148	CB94	RES 2'H
344	203,149	CB95	RES 2'L
345	203,150	CB96	RES 2'(HL)
346	203,151	CB97	RES 2'A
347	203,152	CB98	RES 3'B
348	203,153	CB99	RES 3'C
349	203,154	CB9A	RES 3'D
350	203,155	CB9B	RES 3'E
351	203,156	CB9C	RES 3'H
352	203,157	CB9D	RES 3'L
353	203,158	CB9E	RES 3'(HL)
354	203,159	CB9F	RES 3'A
355	203,160	CBA0	RES 4'B
356	203,161	CBA1	RES 4'C
357	203,162	CBA2	RES 4'D
358	203,163	CBA3	RES 4'E
359	203,164	CBA4	RES 4'H
360	203,165	CBA5	RES 4'L
361	203,166	CBA6	RES 4'(HL)
362	203,167	CBA7	RES 4'A
363	203,168	CBA8	RES 5'B
364	203,169	CBA9	RES 5'C
365	203,170	CBAA	RES 5'D
366	203,171	CBAB	RES 5'E
367	203,172	CBAC	RES 5'H
368	203,173	CBAD	RES 5'L
369	203,174	CBAE	RES 5'(HL)
370	203,175	CBAF	RES 5'A
371	203,176	CBB0	RES 6'B
372	203,177	CBB1	RES 6'C
373	203,178	CBB2	RES 6'D
374	203,179	CBB3	RES 6'E
375	203,180	CBB4	RES 6'H
376	203,181	CBB5	RES 6'L
377	203,182	CBB6	RES 6'(HL)
378	203,183	CBB7	RES 6'A
379	203,184	CBB8	RES 7'B
380	203,185	CBB9	RES 7'C
381	203,186	CBBA	RES 7'D
382	203,187	CBBB	RES 7'E
383	203,188	CBBC	RES 7'H

384	203,189	CBBD	RES 7'L
385	203,190	CBBE	RES 7'(HL)
386	203,191	CBBF	RES 7'A
387	203,192	CBC0	SET 0'B
388	203,193	CBC1	SET 0'C
389	203,194	CBC2	SET 0'D
390	203,195	CBC3	SET 0'E
391	203,196	CBC4	SET 0'H
392	203,197	CBC5	SET 0'L
393	203,198	CBC6	SET 0'(HL)
394	203,199	CBC7	SET 0'A
395	203,200	CBC8	SET 1'B
396	203,201	CBC9	SET 1'C
397	203,202	CBCA	SET 1'D
398	203,203	CBCB	SET 1'E
399	203,204	CBCC	SET 1'H
400	203,205	CBCD	SET 1'L
401	203,206	CBCE	SET 1'(HL)
402	203,207	CBCF	SET 1'A
403	203,208	CBD0	SET 2'B
404	203,209	CBD1	SET 2'C
405	203,210	CBD2	SET 2'D
406	203,211	CBD3	SET 2'E
407	203,212	CBD4	SET 2'H
408	203,213	CBD5	SET 2'L
409	203,214	CBD6	SET 2'(HL)
410	203,215	CBD7	SET 2'A
411	203,216	CBD8	SET 3'B
412	203,217	CBD9	SET 3'C
413	203,218	CBDA	SET 3'D
414	203,219	CBDB	SET 3'E
415	203,220	CBDC	SET 3'H
416	203,221	CBDD	SET 3'L
417	203,222	CBDE	SET 3'(HL)
418	203,223	CBDF	SET 3'A
419	203,224	CBE0	SET 4'B
420	203,225	CBE1	SET 4'C
421	203,226	CBE2	SET 4'D
422	203,227	CBE3	SET 4'E
423	203,228	CBE4	SET 4'H
424	203,229	CBE5	SET 4'L
425	203,230	CBE6	SET 4'(HL)
426	203,231	CBE7	SET 4'A
427	203,232	CBE8	SET 5'B
428	203,233	CBE9	SET 5'C
429	203,234	CBEA	SET 5'D
430	203,235	CBEB	SET 5'E
431	203,236	CBEC	SET 5'H
432	203,237	CBED	SET 5'L
433	203,238	CBEE	SET 5'(HL)
434	203,239	CBEF	SET 5'A
435	203,240	CBF0	SET 6'B
436	203,241	CBF1	SET 6'C
437	203,242	CBF2	SET 6'D
438	203,243	CBF3	SET 6'E
439	203,244	CBF4	SET 6'H
440	203,245	CBF5	SET 6'L
441	203,246	CBF6	SET 6'(HL)
442	203,247	CBF7	SET 6'A
443	203,248	CBF8	SET 7'B
444	203,249	CBF9	SET 7'C
445	203,250	CBFA	SET 7'D
446	203,251	CBFB	SET 7'E
447	203,252	CBFC	SET 7'H
448	203,253	CBFD	SET 7'L
449	203,254	CBFE	SET 7'(HL)
450	203,255	CBFF	SET 7'A
451	204,#,#	CC3412	CALL Z'1234
452	205,#,#	CD3412	CALL 1234
453	206,#	CE12	ADC A'12
454	207	CF	RST 08H
455	208	D0	RET NC
456	209	D1	POP DE
457	210,#,#	D23412	JP NC'1234
458	211,#	D312	OUT (12)'A
459	212,#,#	D43412	CALL NC'1234
460	213	D5	PUSH DE
461	214,#	D612	SUB 12

462	215	D7	RST 10H
463	216	D8	RET C
464	217	D9	EXX
465	218,#,#	DA3412	JP C'1234
466	219,#	DB12	IN A'(12)
467	220,#,#	DC3412	CALL C'1234
468	221, 9	DD09	ADD IX'BC
469	221, 25	DD19	ADD IX'DE
470	221, 33,#,#	DD213412	LD IX'1234
471	221, 34,#,#	DD223412	LD (1234)'IX
472	221, 35	DD23	INC IX
473	221, 41	DD29	ADD IX'HL
474	221, 42,#,#	DD2A3412	LD IX'(1234)
475	221, 43	DD2B	DEC IX
476	221, 52,#	DD3412	INC (IX+12)
477	221, 53,#	DD3512	DEC (IX+12)
478	221, 54,#,#	DD361212	LD (IX+12)'12
479	221, 57	DD39	ADD IX'SP
480	221, 70,#	DD4612	LD B'(IX+12)
481	221, 78,#	DD4E12	LD C'(IX+12)
482	221, 86,#	DD5612	LD D'(IX+12)
483	221, 94,#	DD5E12	LD E'(IX+12)
484	221,102,#	DD6612	LD H'(IX+12)
485	221,110,#	DD6E12	LD L'(IX+12)
486	221,112,#	DD7012	LD (IX+12)'B
487	221,113,#	DD7112	LD (IX+12)'C
488	221,114,#	DD7212	LD (IX+12)'D
489	221,115,#	DD7312	LD (IX+12)'E
490	221,116,#	DD7412	LD (IX+12)'H
491	221,117,#	DD7512	LD (IX+12)'L
492	221,119,#	DD7712	LD (IX+12)'A
493	221,126,#	DD7E12	LD A'(IX+12)
494	221,134,#	DD8612	ADD A'(IX+12)
495	221,142,#	DD8E12	ADC A'(IX+12)
496	221,150,#	DD9612	SUB (IX+12)
497	221,158,#	DD9E12	SBC A'(IX+12)
498	221,166,#	DDA612	AND (IX+12)
499	221,174,#	DDAE12	XOR (IX+12)
500	221,182,#	DDB612	OR (IX+12)
501	221,190,#	DDBE12	CP (IX+12)
502	221,225	DDE1	POP IX
503	221,227	DDE3	EX (SP)'IX
504	221,229	DDE5	PUSH IX
505	221,233	DDE9	JP (IX)
506	221,249	DDF9	LD SP'IX
507	221,203,#, 6	DDCB1206	RLC (IX+12)
508	221,203,#, 14	DDCB120E	RRC (IX+12)
509	221,203,#, 22	DDCB1216	RL (IX+12)
510	221,203,#, 30	DDCB121E	RR (IX+12)
511	221,203,#, 38	DDCB1226	SLA (IX+12)
512	221,203,#, 46	DDCB122E	SRA (IX+12)
513	221,203,#, 62	DDCB123E	SRL (IX+12)
514	221,203,#, 70	DDCB1246	BIT 0'(IX+12)
515	221,203,#, 78	DDCB124E	BIT 1'(IX+12)
516	221,203,#, 86	DDCB1256	BIT 2'(IX+12)
517	221,203,#, 94	DDCB125E	BIT 3'(IX+12)
518	221,203,#,102	DDCB1266	BIT 4'(IX+12)
519	221,203,#,110	DDCB126E	BIT 5'(IX+12)
520	221,203,#,118	DDCB1276	BIT 6'(IX+12)
521	221,203,#,126	DDCB127E	BIT 7'(IX+12)
522	221,203,#,134	DDCB1286	RES 0'(IX+12)
523	221,203,#,142	DDCB128E	RES 1'(IX+12)
524	221,203,#,150	DDCB1296	RES 2'(IX+12)
525	221,203,#,158	DDCB129E	RES 3'(IX+12)
526	221,203,#,166	DDCB12A6	RES 4'(IX+12)
527	221,203,#,174	DDCB12AE	RES 5'(IX+12)
528	221,203,#,182	DDCB12B6	RES 6'(IX+12)
529	221,203,#,190	DDCB12BE	RES 7'(IX+12)
530	221,203,#,198	DDCB12C6	SET 0'(IX+12)
531	221,203,#,206	DDCB12CE	SET 1'(IX+12)
532	221,203,#,214	DDCB12D6	SET 2'(IX+12)
533	221,203,#,222	DDCB12DE	SET 3'(IX+12)
534	221,203,#,230	DDCB12E6	SET 4'(IX+12)
535	221,203,#,238	DDCB12EE	SET 5'(IX+12)
536	221,203,#,246	DDCB12F6	SET 6'(IX+12)
537	221,203,#,254	DDCB12FE	SET 7'(IX+12)
538	222,#	DE12	SBC A'12
539	223	DF	RST 18H

540	224	E0	RET PO
541	225	E1	POP HL
542	226,#,#	E23412	JP PO'1234
543	227	E3	EX (SP)'HL
544	228,#,#	E43412	CALL PO'1234
545	229	E5	PUSH HL
546	230,#	E612	AND 12
547	231	E7	RST 20H
548	232	E8	RET PE
549	233	E9	JP (HL)
550	234,#,#	EA3412	JP PE'1234
551	235	EB	EX DE'HL
552	236,#,#	EC3412	CALL PE'1234
553	237, 64	ED40	IN B'(C)
554	237, 65	ED41	OUT (C)'B
555	237, 66	ED42	SBC HL'BC
556	237, 67,#,#	ED433412	LD (1234)'BC
557	237, 68	ED44	NEG
558	237, 69	ED45	RETN
559	237, 70	ED46	IM 0
560	237, 71	ED47	LD I'A
561	237, 72	ED48	IN C'(C)
562	237, 73	ED49	OUT (C)'C
563	237, 74	ED4A	ADC HL'BC
564	237, 75,#,#	ED4B3412	LD BC'(1234)
565	237, 77	ED4D	RETI
566	237, 79	ED4F	LD R'A
567	237, 80	ED50	IN D'(C)
568	237, 81	ED51	OUT (C)'D
569	237, 82	ED52	SBC HL'DE
570	237, 83,#,#	ED533412	LD (1234)'DE
571	237, 86	ED56	IM 1
572	237, 87	ED57	LD A'I
573	237, 88	ED58	IN E'(C)
574	237, 89	ED59	OUT (C)'E
575	237, 90	ED5A	ADC HL'DE
576	237, 91,#,#	ED5B3412	LD DE'(1234)
577	237, 94	ED5E	IM 2
578	237, 95	ED5F	LD A'R
579	237, 96	ED60	IN H'(C)
580	237, 97	ED61	OUT (C)'H
581	237, 98	ED62	SBC HL'HL
582	237,103	ED67	RRD
583	237,104	ED68	IN L'(C)
584	237,105	ED69	OUT (C)'L
585	237,106	ED6A	ADC HL'HL
586	237,111	ED6F	RLD
587	237,114	ED72	SBC HL'SP
588	237,115,#,#	ED733412	LD (1234)'SP
589	237,120	ED78	IN A'(C)
590	237,121	ED79	OUT (C)'A
591	237,122	ED7A	ADC HL'SP
592	237,123,#,#	ED7B3412	LD SP'(1234)
593	237,160	EDA0	LDI
594	237,161	EDA1	CPI
595	237,162	EDA2	INI
596	237,163	EDA3	OUTI
597	237,168	EDA8	LDD
598	237,169	EDA9	CPD
599	237,170	EDAA	IND
600	237,171	EDAB	OUTD
601	237,176	EDB0	LDIR
602	237,177	EDB1	CPIR
603	237,178	EDB2	INIR
604	237,179	EDB3	OTIR
605	237,184	EDB8	LDDR
606	237,185	EDB9	CPDR
607	237,186	EDBA	INDR
608	237,187	EDBB	OTDR
609	238,#	EE12	XOR 12
610	239	EF	RST 28H
611	240	F0	RET P
612	241	F1	POP AF
613	242,#,#	F23412	JP P'1234
614	243	F3	DI
615	244,#,#	F43412	CALL P'1234
616	245	F5	PUSH AF
617	246,#	F612	OR 12

618	247	F7	RST 30H
619	248	F8	RET M
620	249	F9	LD SP'HL
621	250,#,#	FA3412	JP M'1234
622	251	FB	EI
623	252,#,#	FC3412	CALL M'1234
624	253, 9	FD09	ADD IY'BC
625	253, 25	FD19	ADD IY'DE
626	253, 33,#,#	FD213412	LD IY'1234
627	253, 34,#,#	FD223412	LD (1234)'IY
628	253, 35	FD23	INC IY
629	253, 41	FD29	ADD IY'HL
630	253, 42,#,#	FD2A3412	LD IY'(1234)
631	253, 43	FD2B	DEC IY
632	253, 52,#	FD3412	INC (IY+12)
633	253, 53,#	FD3512	DEC (IY+12)
634	253, 54,#,#	FD361212	LD (IY+12)'12
635	253, 57	FD39	ADD IY'SP
636	253, 70,#	FD4612	LD B'(IY+12)
637	253, 78,#	FD4E12	LD C'(IY+12)
638	253, 86,#	FD5612	LD D'(IY+12)
639	253, 94,#	FD5E12	LD E'(IY+12)
640	253,102,#	FD6612	LD H'(IY+12)
641	253,110,#	FD6E12	LD L'(IY+12)
642	253,112,#	FD7012	LD (IY+12)'B
643	253,113,#	FD7112	LD (IY+12)'C
644	253,114,#	FD7212	LD (IY+12)'D
645	253,115,#	FD7312	LD (IY+12)'E
646	253,116,#	FD7412	LD (IY+12)'H
647	253,117,#	FD7512	LD (IY+12)'L
648	253,119,#	FD7712	LD (IY+12)'A
649	253,126,#	FD7E12	LD A'(IY+12)
650	253,134,#	FD8612	ADD A'(IY+12)
651	253,142,#	FD8E12	ADC A'(IY+12)
652	253,150,#	FD9612	SUB (IY+12)
653	253,158,#	FD9E12	SBC A'(IY+12)
654	253,166,#	FDA612	AND (IY+12)
655	253,174,#	FDAE12	XOR (IY+12)
656	253,182,#	FDB612	OR (IY+12)
657	253,190,#	FDBE12	CP (IY+12)
658	253,203,#, 6	FDCB1206	RLC (IY+12)
659	253,203,#, 14	FDCB120E	RRC (IY+12)
660	253,203,#, 22	FDCB1216	RL (IY+12)
661	253,203,#, 30	FDCB121E	RR (IY+12)
662	253,203,#, 38	FDCB1226	SLA (IY+12)
663	253,203,#, 46	FDCB122E	SRA (IY+12)
664	253,203,#, 62	FDCB123E	SRL (IY+12)
665	253,203,#, 70	FDCB1246	BIT 0'(IY+12)
666	253,203,#, 78	FDCB124E	BIT 1'(IY+12)
667	253,203,#, 86	FDCB1256	BIT 2'(IY+12)
668	253,203,#, 94	FDCB125E	BIT 3'(IY+12)
669	253,203,#,102	FDCB1266	BIT 4'(IY+12)
670	253,203,#,110	FDCB126E	BIT 5'(IY+12)
671	253,203,#,118	FDCB1276	BIT 6'(IY+12)
672	253,203,#,126	FDCB127E	BIT 7'(IY+12)
673	253,203,#,134	FDCB1286	RES 0'(IY+12)
674	253,203,#,142	FDCB128E	RES 1'(IY+12)
675	253,203,#,150	FDCB1296	RES 2'(IY+12)
676	253,203,#,158	FDCB129E	RES 3'(IY+12)
677	253,203,#,166	FDCB12A6	RES 4'(IY+12)
678	253,203,#,174	FDCB12AE	RES 5'(IY+12)
679	253,203,#,182	FDCB12B6	RES 6'(IY+12)
680	253,203,#,190	FDCB12BE	RES 7'(IY+12)
681	253,203,#,198	FDCB12C6	SET 0'(IY+12)
682	253,203,#,206	FDCB12CE	SET 1'(IY+12)
683	253,203,#,214	FDCB12D6	SET 2'(IY+12)
684	253,203,#,222	FDCB12DE	SET 3'(IY+12)
685	253,203,#,230	FDCB12E6	SET 4'(IY+12)
686	253,203,#,238	FDCB12EE	SET 5'(IY+12)
687	253,203,#,246	FDCB12F6	SET 6'(IY+12)
688	253,203,#,254	FDCB12FE	SET 7'(IY+12)
689	253,225	FDE1	POP IY
690	253,227	FDE3	EX (SP)'IY
691	253,229	FDE5	PUSH IY
692	253,233	FDE9	JP (IY)
693	253,249	FDF9	LD SP'IY
694	254,#	FE12	CP 12
695	255	FF	RST 38H